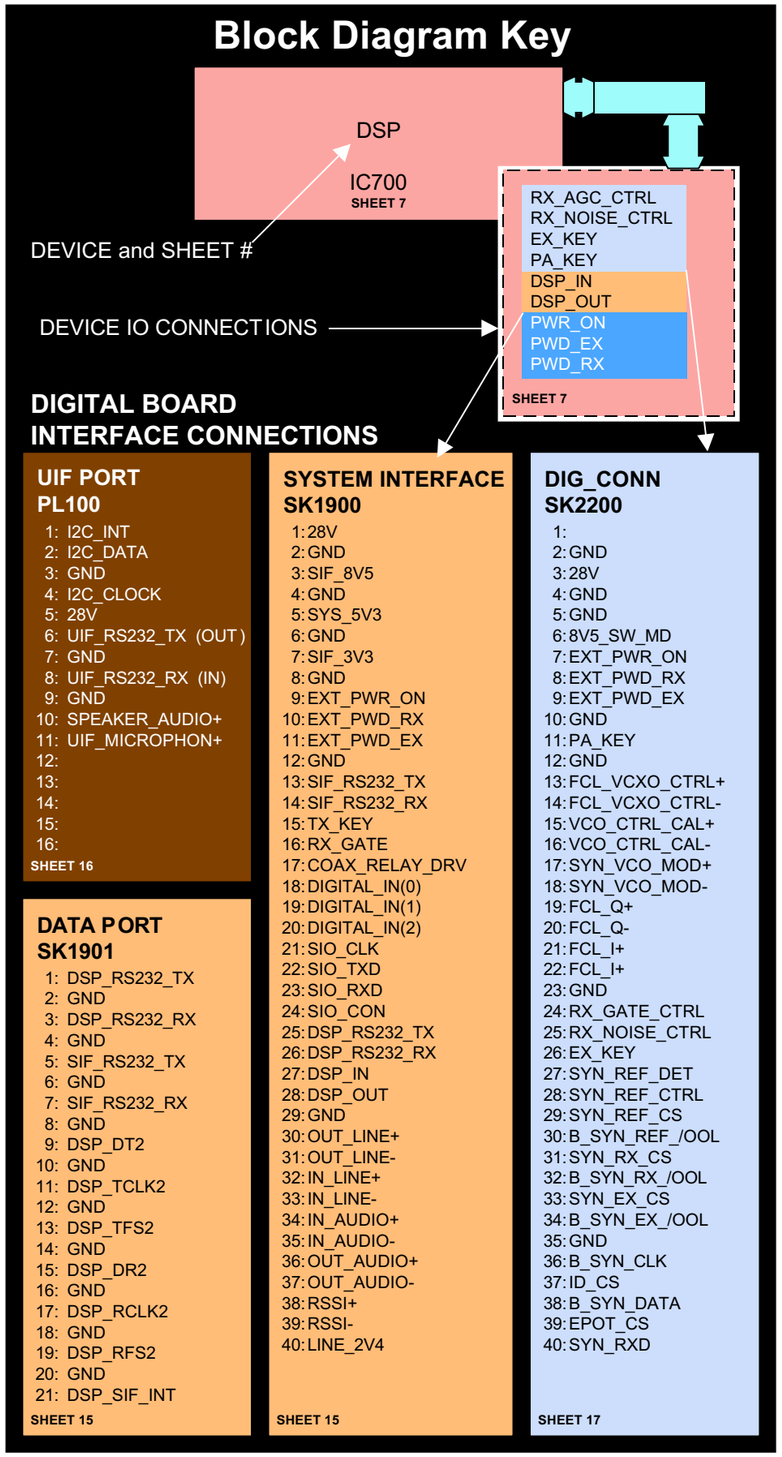
Block Diagram Key
DSP
IC700
SHEET 7
DEVICE and SHEET #
DEVICE IO CONNECTIONS
RX_AGC_CTRL
RX_NOISE_CTRL
EX_KEY
PA_KEY
DSP_IN
DSP_OUT
PWR_ON
PWD_EX
PWD_RX
SHEET 7
DIGITAL BOARD INTERFACE CONNECTIONS
UIF PORT PL100
1: I2C_INT
2: I2C_DATA
3: GND
4: I2C_CLOCK
5: 28V
6: UIF_RS232_TX (OUT)
7: GND
8: UIF_RS232_RX (IN)
9: GND
10: SPEAKER_AUDIO+
11: UIF_MICROPHON+
12:
13:
14:
15:
16:
SHEET 16
DATA PORT SK1901
1: DSP_RS232_TX
2: GND
3: DSP_RS232_RX
4: GND
5: SIF_RS232_TX
6: GND
7: SIF_RS232_RX
8: GND
9: DSP_DT2
10: GND
11: DSP_TCLK2
12: GND
13: DSP_TFS2
14: GND
15: DSP_DR2
16: GND
17: DSP_RCLK2
18: GND
19: DSP_RFS2
20: GND
21: DSP_SIF_INT
SHEET 15
SYSTEM INTERFACE SK1900
1:28V
2:GND
3:SIF_8V5
4:GND
5:SYS_5V3
6:GND
7:SIF_3V3
8:GND
9:EXT_PWR_ON
10:EXT_PWD_RX
11:EXT_PWD_EX
12:GND
13:SIF_RS232_TX
14:SIF_RS232_RX
15:TX_KEY
16:RX_GATE
17:COAX_RELAY_DRV
18:DIGITAL_IN(0)
19:DIGITAL_IN(1)
20:DIGITAL_IN(2)
21:SIO_CLK
22:SIO_TXD
23:SIO_RXD
24:SIO_CON
25:DSP_RS232_TX
26:DSP_RS232_RX
27:DSP_IN
28:DSP_OUT
29:GND
30:OUT_LINE+
31:OUT_LINE-
32:IN_LINE+
33:IN_LINE-
34:IN_AUDIO+
35:IN_AUDIO-
36:OUT_AUDIO+
37:OUT_AUDIO-
38:RSSI+
39:RSSI-
40:LINE_2V4
SHEET 15
DIG_CONN SK2200
1:
2:GND
3:28V
4:GND
5:GND
6:8V5_SW_MD
7:EXT_PWR_ON
8:EXT_PWD_RX
9:EXT_PWD_EX
10:GND
11:PA_KEY
12:GND
13:FCL_VCXO_CTRL+
14:FCL_VCXO_CTRL-
15:VCO_CTRL_CAL+
16:VCO_CTRL_CAL-
17:SYN_VCO_MOD+
18:SYN_VCO_MOD-
19:FCL_Q+
20:FCL_Q-
21:FCL_I+
22:FCL_I+
23:GND
24:RX_GATE_CTRL
25:RX_NOISE_CTRL
26:EX_KEY
27:SYN_REF_DET
28:SYN_REF_CTRL
29:SYN_REF_CS
30:B_SYN_REF_/OOL
31:SYN_RX_CS
32:B_SYN_RX_/OOL
33:SYN_EX_CS
34:B_SYN_EX_/OOL
35:GND
36:B_SYN_CLK
37:ID_CS
38:B_SYN_DATA
39:EPOT_CS
40:SYN_RXD
SHEET 17

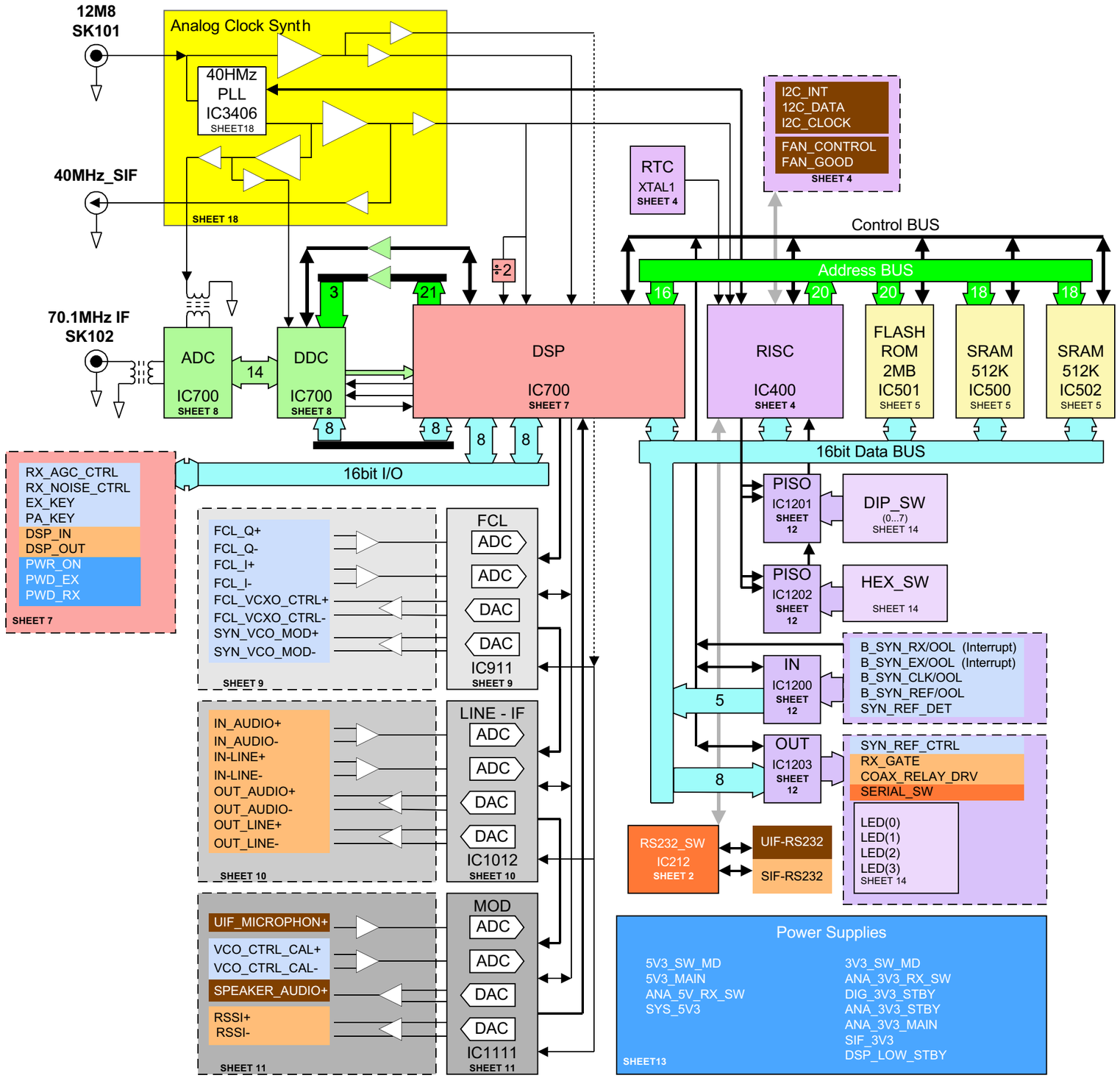
12M8 SK101
Analog Clock Synth
40HMz PLL IC3406
SHEET18
SHEET 18
40MHz_SIF
70.1MHz IF SK102
ADC IC700 SHEET 8
DDC IC700 SHEET 8
DSP IC700 SHEET 7
RISC IC400 SHEET 4
FLASH ROM 2MB IC501 SHEET 5
SRAM 512K IC500 SHEET 5
SRAM 512K IC502 SHEET 5
I2C_INT
12C_DATA
I2C_CLOCK
FAN_CONTROL
FAN_GOOD
SHEET 4
RTC
XTAL1
SHEET 4
Control BUS
Address BUS
16bit Data BUS
16bit I/O
RX_AGC_CTRL
RX_NOISE_CTRL
EX_KEY
PA_KEY
DSP_IN
DSP_OUT
PWR_ON
PWD_EX
PWD_RX
SHEET 7
FCL_Q+
FCL_Q-
FCL_I+
FCL_I-
FCL_VCXO_CTRL+
FCL_VCXO_CTRL-
SYN_VCO_MOD+
SYN_VCO_MOD-
SHEET 9
FCL ADC ADC DAC DAC IC911 SHEET 9
IN_AUDIO+
IN_AUDIO-
IN-LINE+
IN-LINE-
OUT_AUDIO+
OUT_AUDIO-
OUT_LINE+
OUT_LINE-
SHEET 10
LINE - IF ADC ADC DAC DAC IC1012 SHEET 10
UIF_MICROPHON+
VCO_CTRL_CAL+
VCO_CTRL_CAL-
SPEAKER_AUDIO+
RSSI+
RSSI-
SHEET 11
MOD ADC ADC DAC DAC IC1111 SHEET 11
PISO IC1201 SHEET 12
DIP_SW (0...7) SHEET 14
PISO IC1202 SHEET 12
HEX_SW SHEET 14
IN IC1200 SHEET 12
B_SYN_RX/OOL (Interrupt)
B_SYN_EX/OOL (Interrupt)
B_SYN_CLK/OOL
B_SYN_REF/OOL
SYN_REF_DET
OUT IC1203 SHEET 12
SYN_REF_CTRL
RX_GATE
COAX_RELAY_DRV
SERIAL_SW
LED(0)
LED(1)
LED(2)
LED(3)
SHEET 14
RS232_SW IC212 SHEET 2
UIF-RS232
SIF-RS232
Power Supplies
5V3_SW_MD
5V3_MAIN
ANA_5V_RX_SW
SYS_5V3
3V3_SW_MD
ANA_3V3_RX_SW
DIG_3V3_STBY
ANA_3V3_STBY
ANA_3V3_MAIN
SIF_3V3
DSP_LOW_STBY
SHEET13

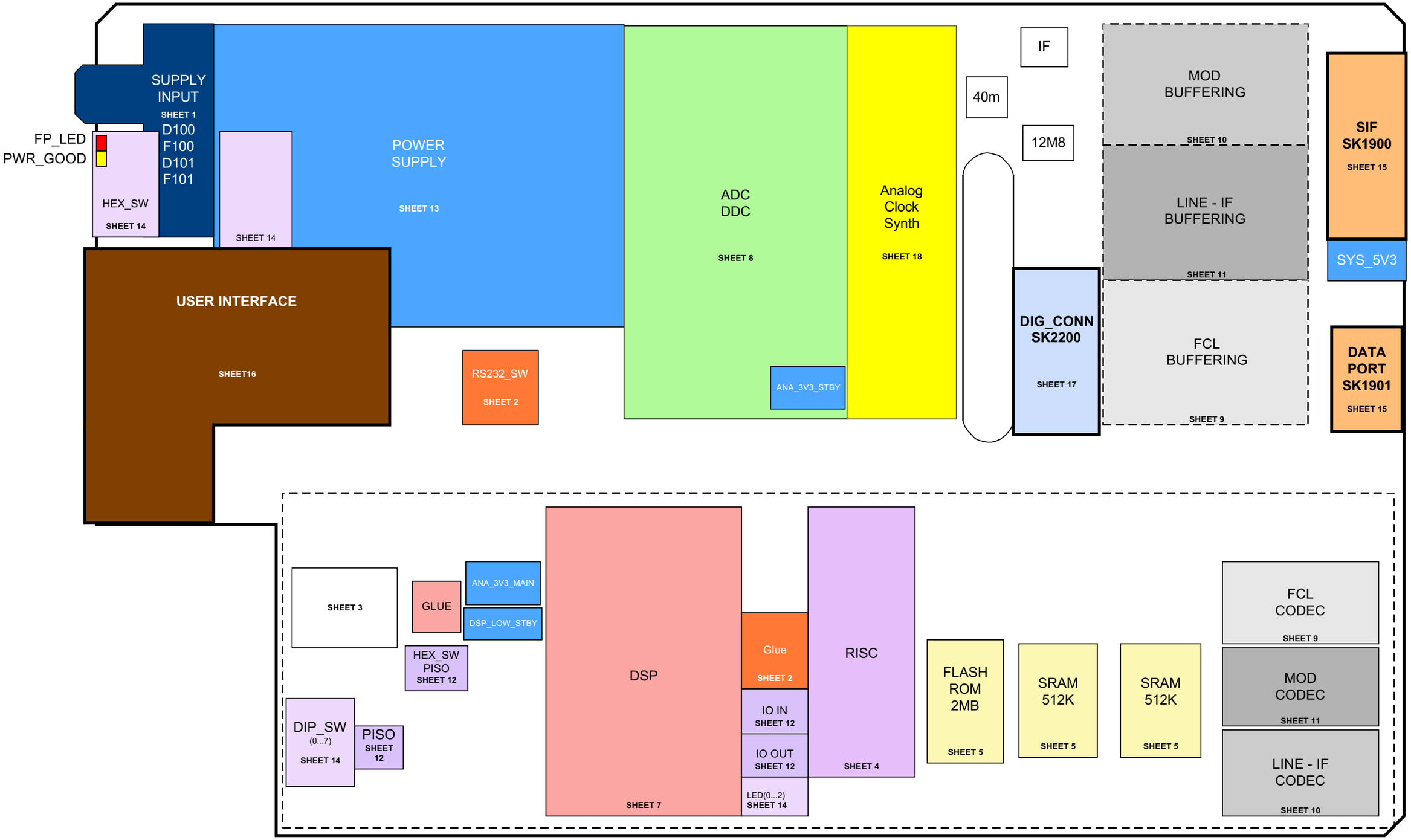
SUPPLY INPUT
SHEET 1
D100
F100
D101
F101
FP_LED
PWR_GOOD
HEX_SW
SHEET 14
SHEET 14
POWER SUPPLY
SHEET 13
ADC DDC
SHEET 8
Analog Clock Synth
SHEET 18
IF
40m
12M8
MOD BUFFERING
SHEET 10
LINE - IF BUFFERING
SHEET 11
FCL BUFFERING
SHEET 9
SIF SK1900
SHEET 15
SYS_5V3
DIG_CONN SK2200
SHEET 17
DATA PORT SK1901
SHEET 15
USER INTERFACE
SHEET16
RS232_SW
SHEET 2
ANA_3V3_STBY
SHEET 3
GLUE
ANA_3V3_MAIN
DSP_LOW_STBY
HEX_SW PISO
SHEET 12
DIP_SW
(0...7)
SHEET 14
PISO
SHEET 12
DSP
SHEET 7
Glue
SHEET 2
IO IN
SHEET 12
IO OUT
SHEET 12
LED(0...2)
SHEET 14
RISC
SHEET 4
FLASH ROM 2MB
SHEET 5
SRAM 512K
SHEET 5
SRAM 512K
SHEET 5
FCL CODEC
SHEET 9
MOD CODEC
SHEET 11
LINE - IF CODEC
SHEET 10